property of DUNHAM-BUSH, INC. This drawing may not, in whole or in part, be duplicated or disclosed or used for manufacture of the part disclosed herein, without the prior written permission of DUNHAM-BUSH, INC."

REV: 00

C1-1

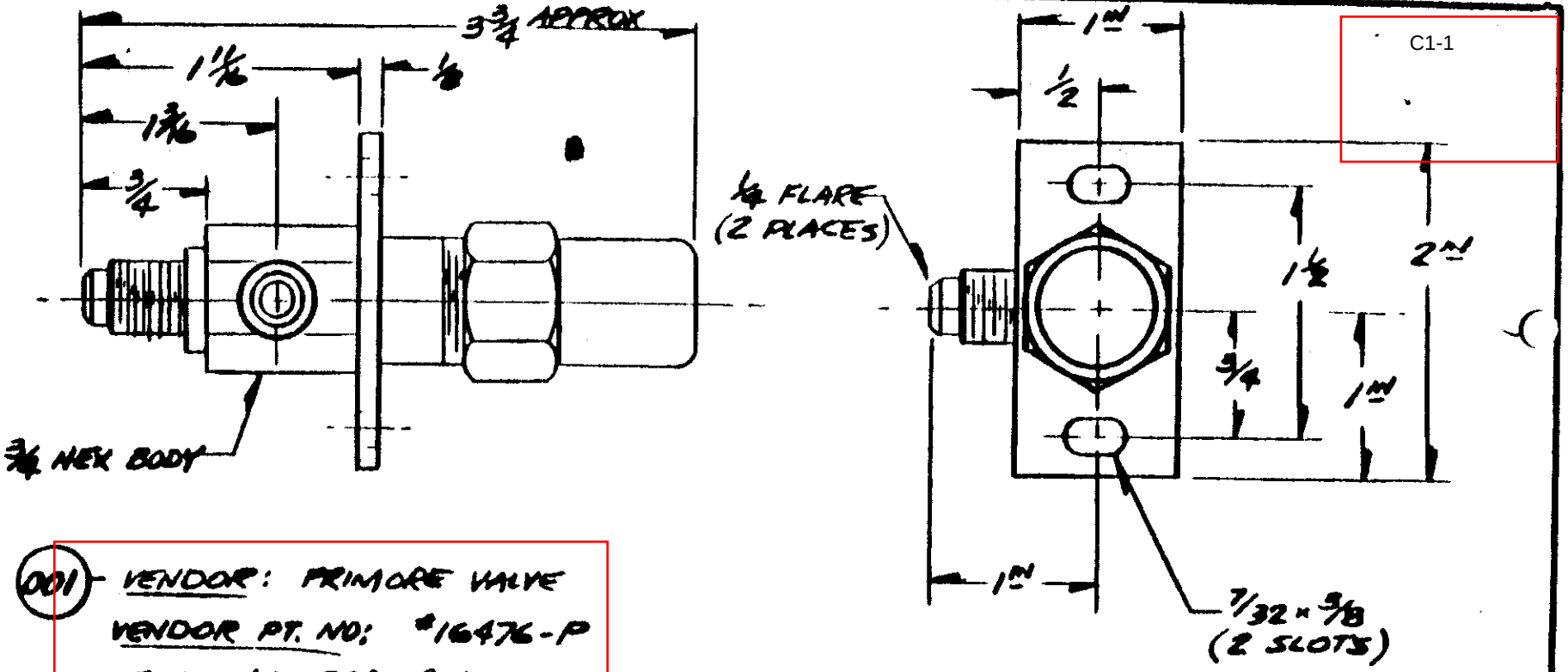

(001) VENDOR: PRIMORE VALVE
VENDOR PT. NO: #16476-P
FINISH: CAD. PLATED

ARI P/N 800-207-28

SAME AS VAL-458 EXCEPT PLATED

REVISION	BY	✓	DATE	REL	C-1373-0
			2 25 77		

SHOP TOLERANCES

MAT.	DUNHAM-BUSH, INC. HARRISONBURG, VIRGINIA		
PART VALVE, FLARE, BRACKET	DRAWN	CHECKED	SCALE FULL
FOR APC /ACU	TR		DATE 2/3/77
TYPE GAUGE/LIGHT MODEL OPTION	PART OF		DRAWING NO.
PROD.	ML		A457023

FORM 60 35